Installation Guide *for AC-6000 V1.4*

Fingerprint Identification Terminal

Doc. Ver. : V1.10

Sep.,01.2009

R&D Center

Union Community Co., Ltd.

1. Power Connection

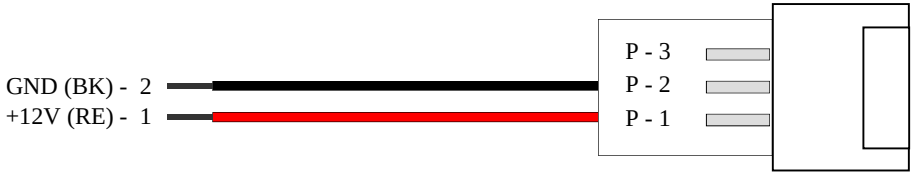

Power Adapter Interface

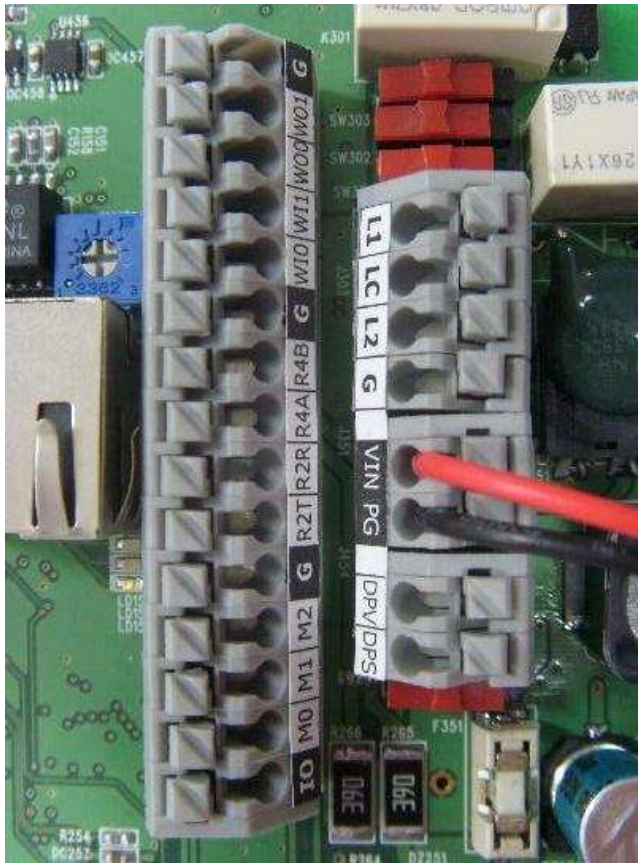

** Insert the Power Cable to VIN/PG CONNECTORS ON THE Terminal Block.
MATCH THE right coloUrS AS SHOWN IN the picture.

2. Connecting Ethernet & Power Cable

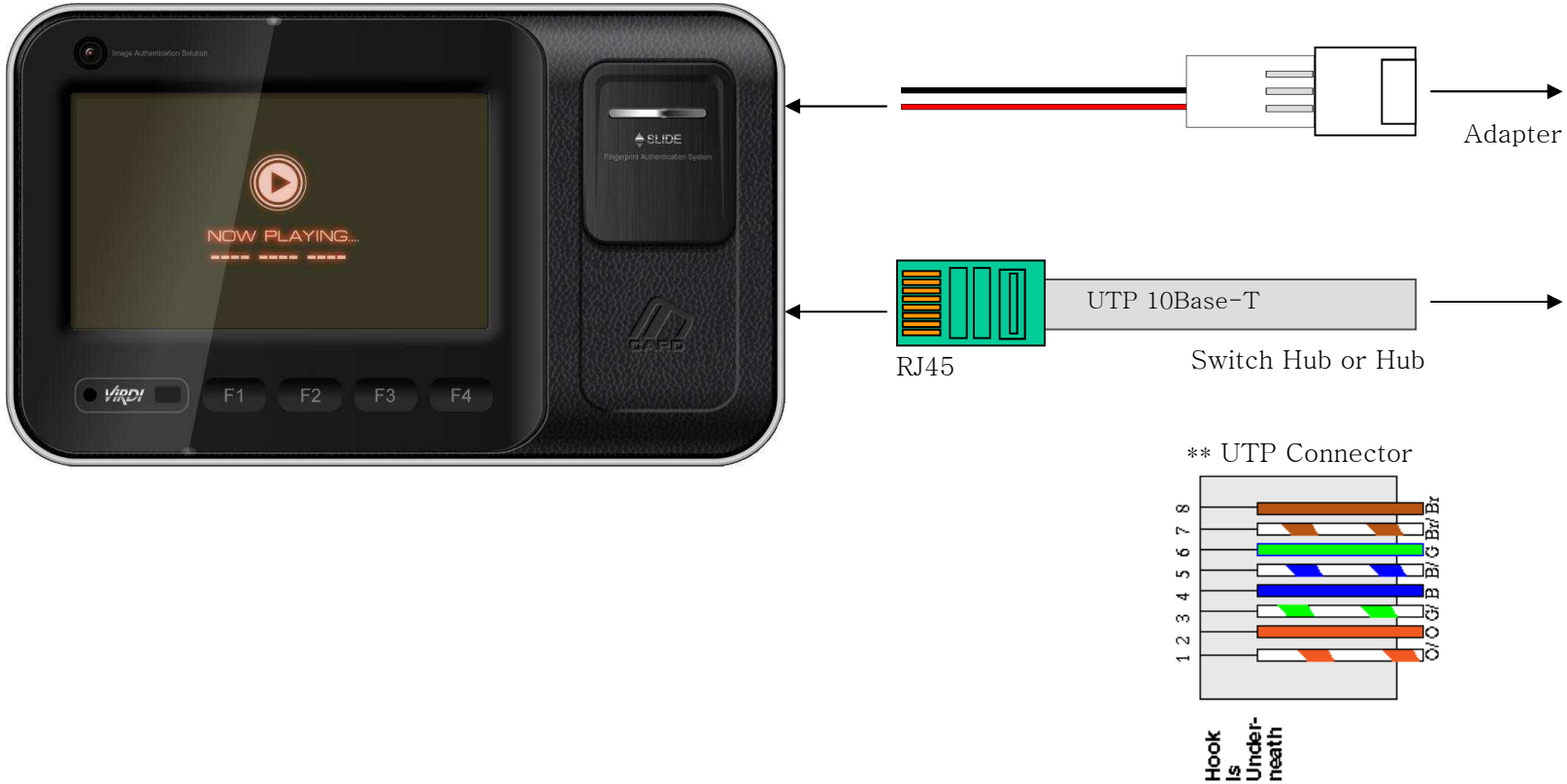

3. Main Board Features

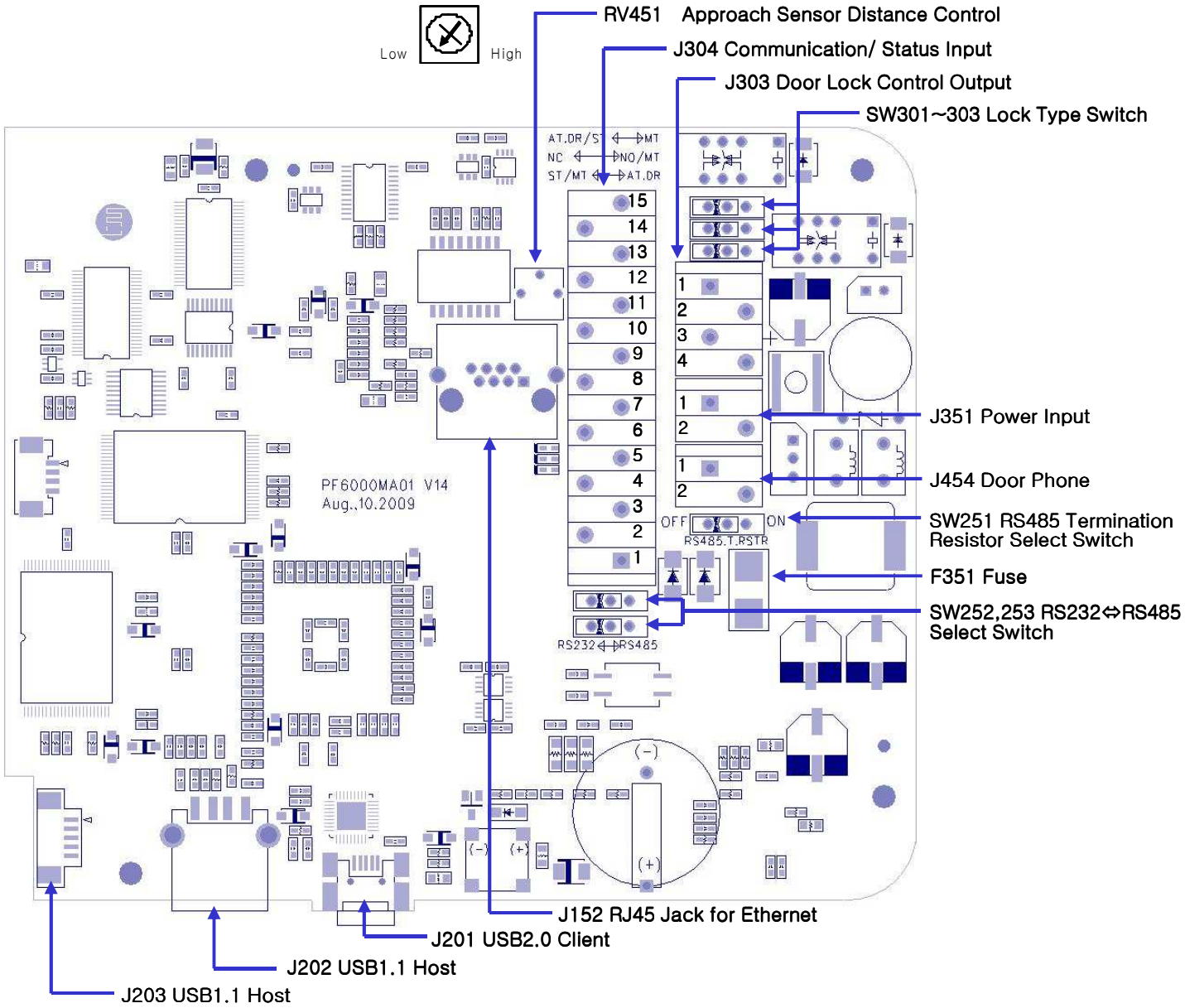

Switch Setting I [Lock Type Selection]
SW301 : ST/M [Strike/Motor/Dead-Bolt Lock]
A/D [Auto Door Selection]
SW302 : NO/MT [Normal Open Relay Contact]
NC [Normal Close Relay Contact]
SW303 : ST/AT.DR [Strike, Auto Door, Dead Bolt]
MT [Motor Lock Selection]

Switch Setting II [RS485 T. Resistor Selection]
SW251 : ON [120ohm Termination Resistor]
OFF [Open the Termination Resistor]

Switch Setting III [RS232⇔RS485 Selection]
SW252,253 : RS232 [J304 Pin 6&7 Enabled]
RS485 [J306 Pin 8&9 Enabled]

J303 Door Lock Control Output
1 [L1] : Lock Output 1
2 [LC] : Lock COM for Output 1
3 [L2] : Lock Output 2
4 [G] : Ground for Lock Control

J304 Communication/ Status Input
1 [IO]: Inside Open
2 [M0]: Door Monitor 0
3 [M1]: Door Monitor 1
4 [M2]: Door Monitor 2
5 [G] : Ground [Door Status]
6 [R2T]: RS232 TXD Output
7 [R2R]: RS232 RXD Input
8 [R4A]: RS485 A
9 [R4B]: RS485 B
10[G]: Ground [Serial Com Port]
11[WI0]: Wiegand Input 0
12[WI1]: Wiegand Input 1
13[WO0]: Wiegand Output 0
14[WO1]: Wiegand Output 1
15[G] : Ground [Wiegand Interface]

J351 Power Input
1 [VIN] : DC Power Input
2 [PG] : Ground for DC Power

J454 Door Phone Interface
1 [DPV] : Door Phone Voltage IN
2 [DPS] : Door Phone Signal

4. Keypad Board Feature

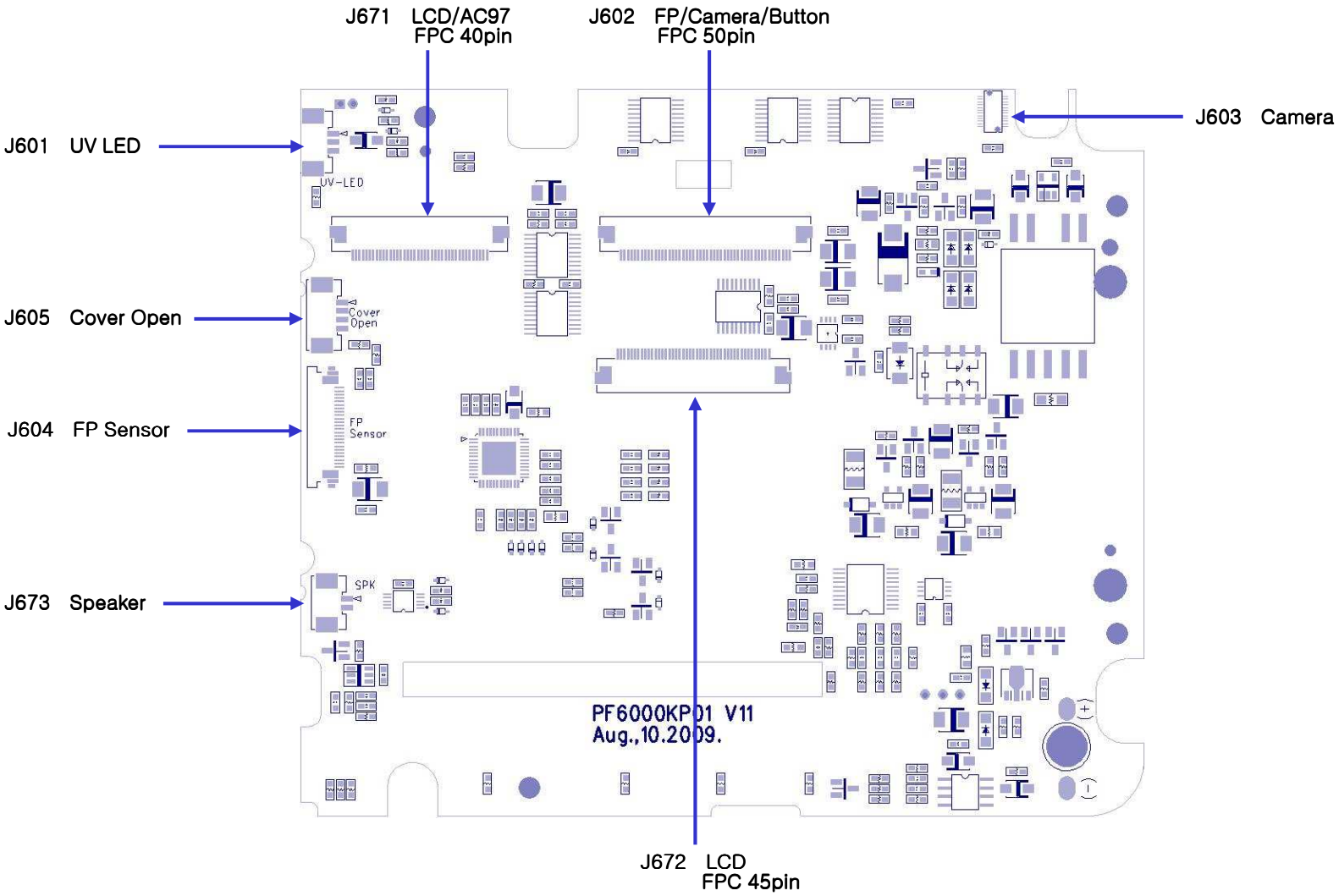

5. Schematic for Door Lock Interface

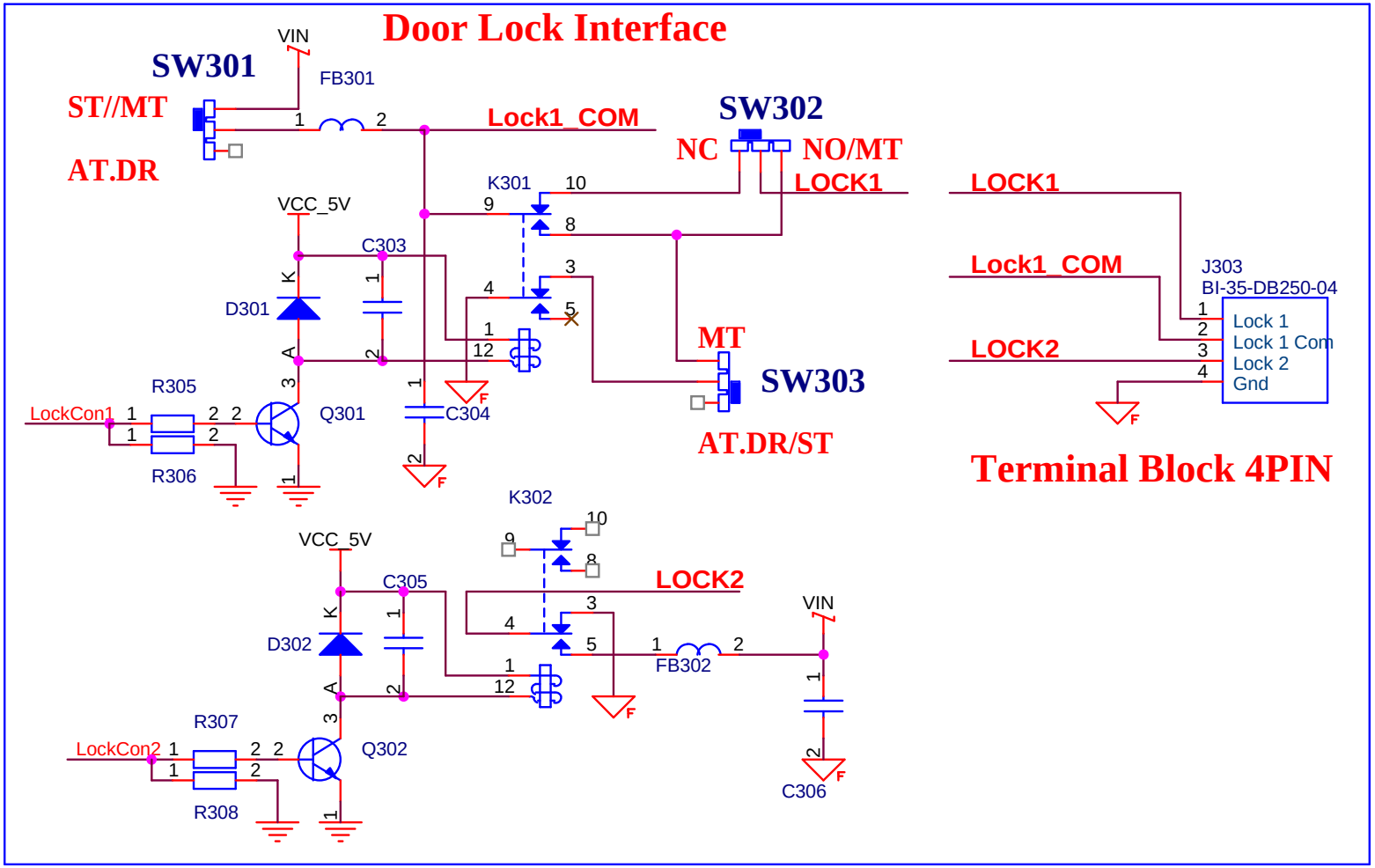

6. Connection of Wires to Terminal Blocks

UNION COMMUNITY

J304 communication/ Status Input

15[G] : Ground [Wiegand]

14[WO1]: Wiegand Output 1

13[WO0]: Wiegand Output 0

12[WI1]: Wiegand Input 1

11[WI0]: Wiegand Input 0

10[G]: Ground [Serial Port]

9 [R4B]: RS485 B

8 [R4A]: RS485 A

7 [R2R]: RS232 RXD Input

6 [R2T]: RS232 TXD Output

5 [G] : Ground [Input]

4 [M2]: Door Monitor 2

3 [M1]: Door Monitor 1

2 [M0]: Door Monitor 0

1 [IO]: Inside Open

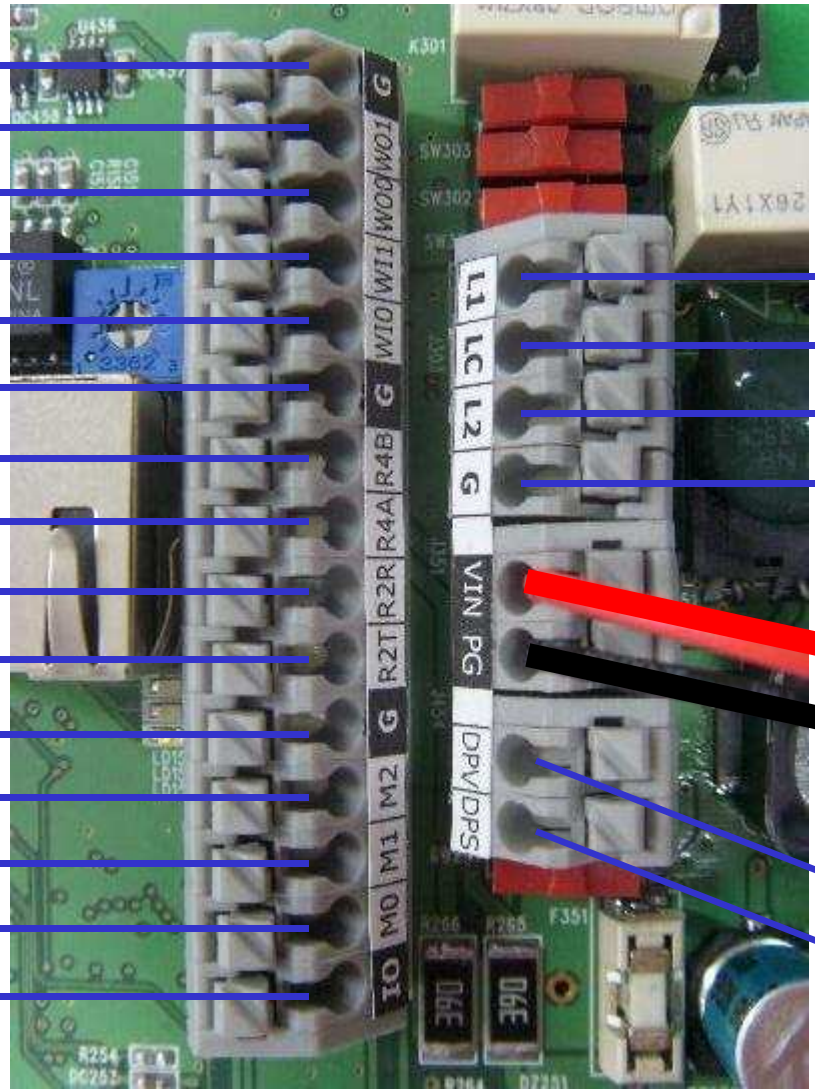

J303 Door Lock Control Output

1 [L1] : Lock Output 1

2 [LC] : Lock COM for Output 1

3 [L2] : Lock Output 2

4 [G] : Ground for Lock Control

J351 Power Input

1 [VIN] : DC Power Input

2 [PG] : Ground for DC Power

J454 Door Phone Interface

1 [DPV] : Door Phone Voltage IN

2 [DPS] :Door Phone Signal

7. Connection of Door Phone

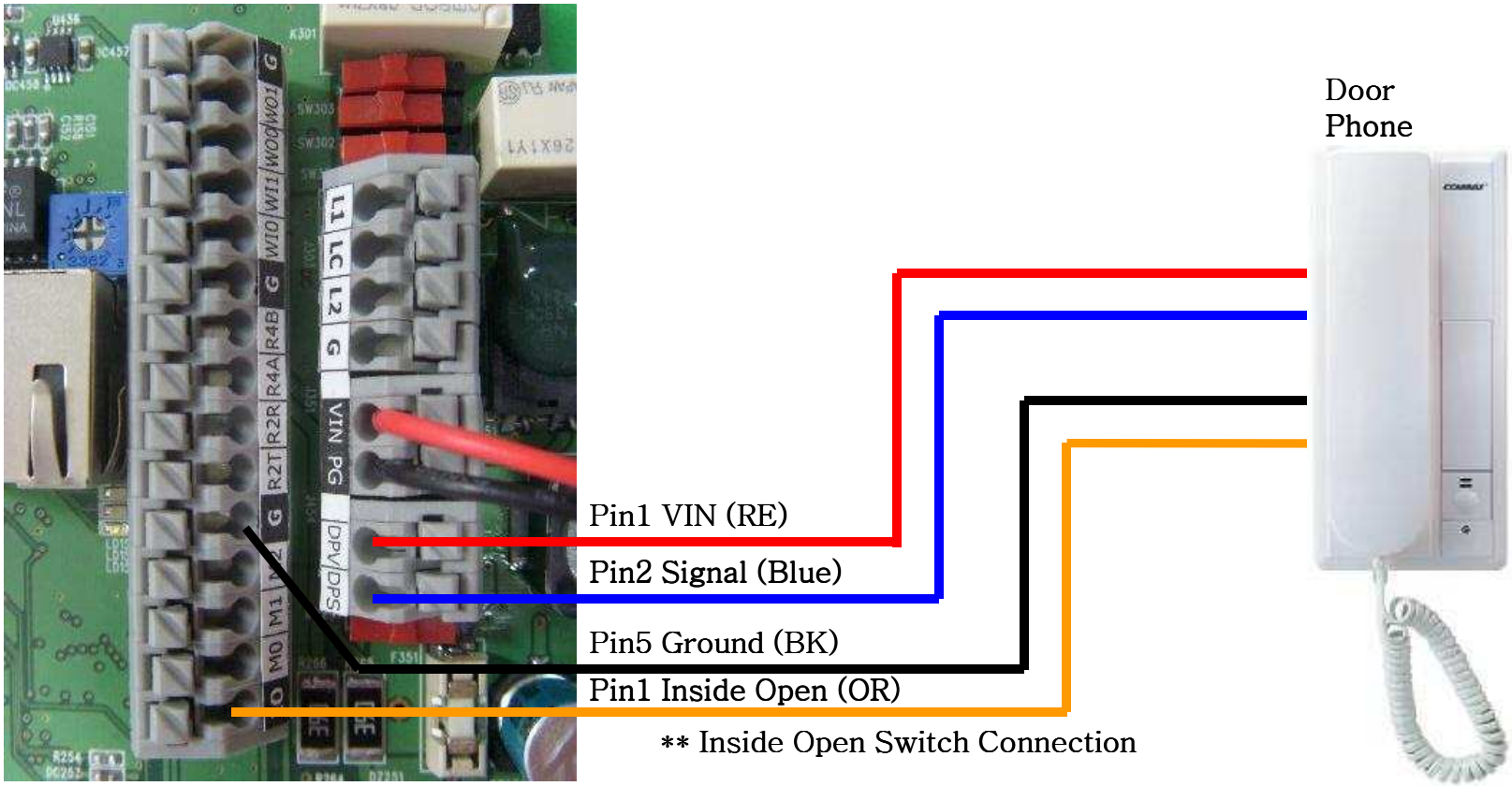

The Installation distance is Max 30M (100ft) between THE AC-6000 and Door Phone.
If you want to call the door phone, please use the “Call” button.

※**The WIRE ColoUrS ARE not important….

8. Connecting Dead-Bolt Type Door Lock (Fail Safe)

8.1. Connect with One System/ One Lock

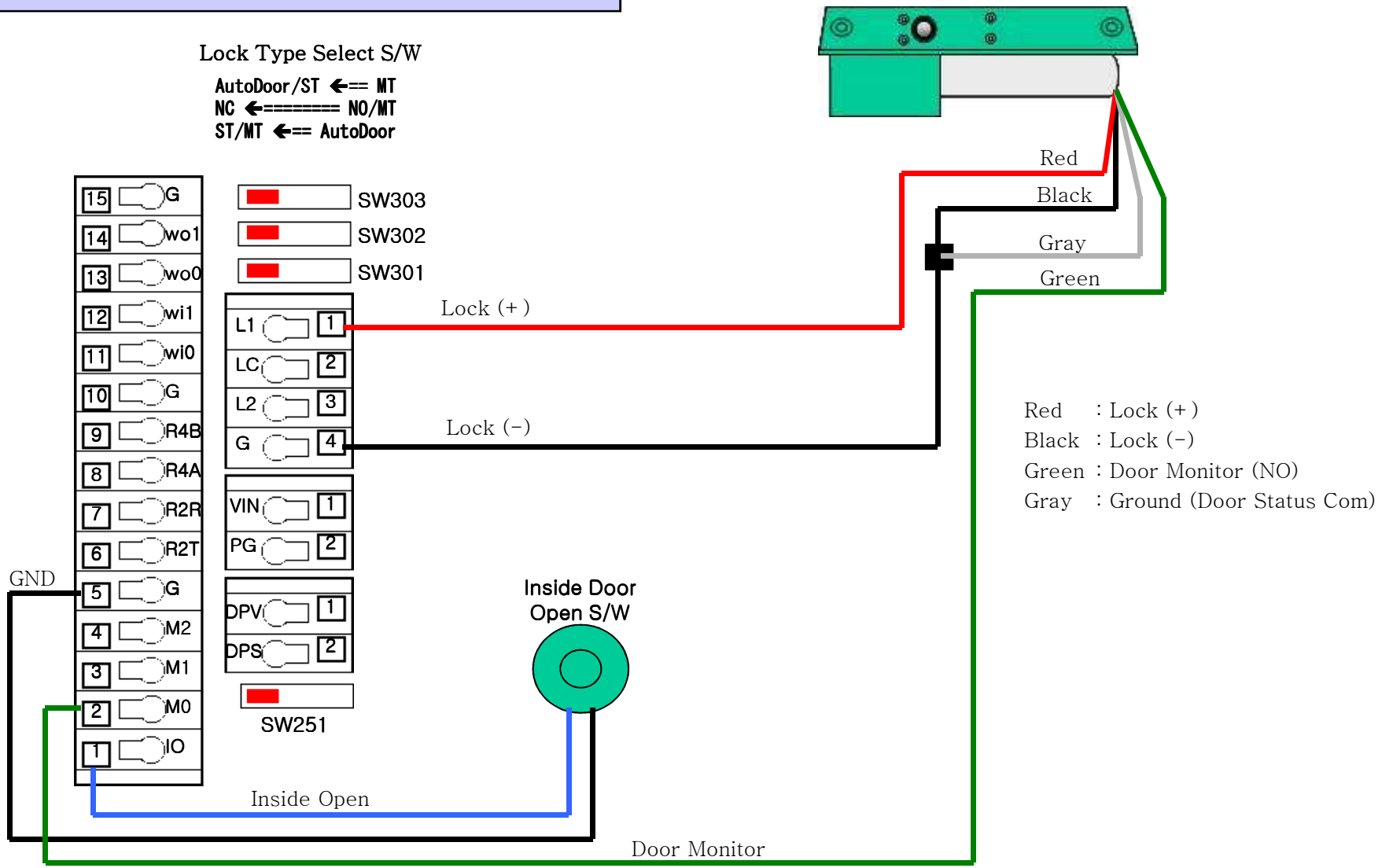

8. Connecting Dead-Bolt Type Door Lock (Fail Safe)

8.2. Connect with Two Systems/ One Lock

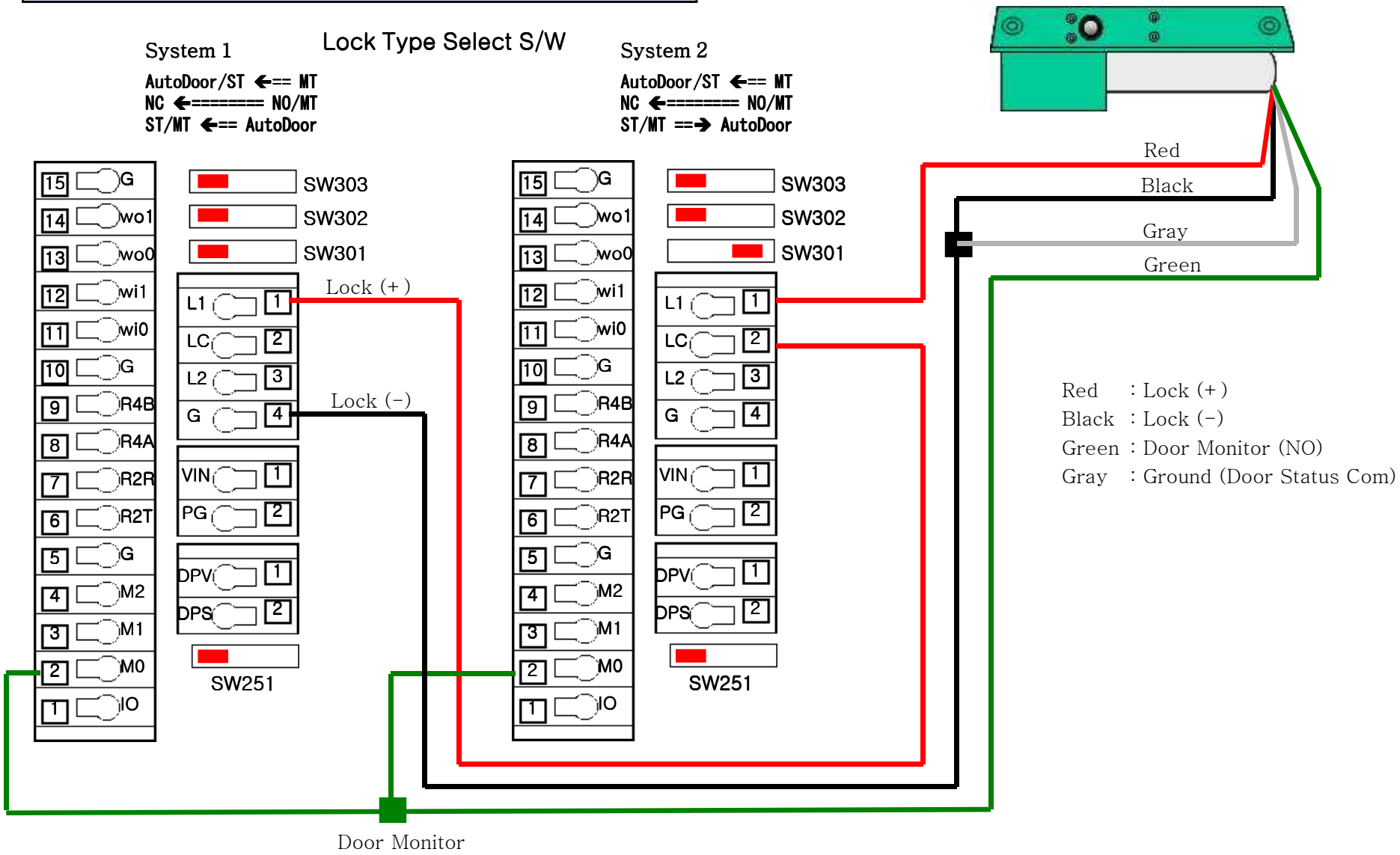

9. Connecting Strike Type Door Lock (Fail Safe)

9.1. Connect with One System/ One Lock

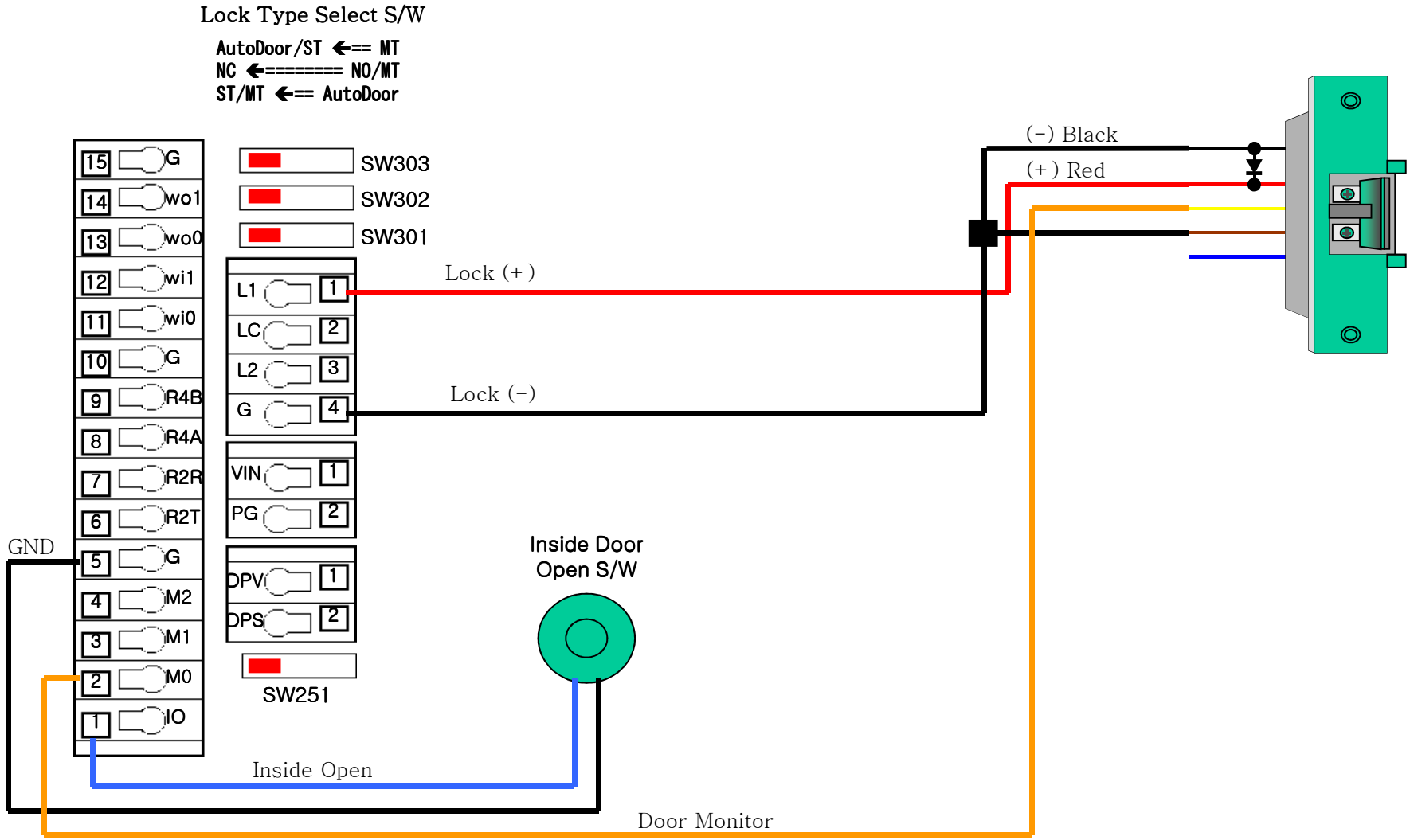

9. Connecting Strike Type Door Lock (Fail Safe)

9.2. Connect with Two Systems/ One Lock

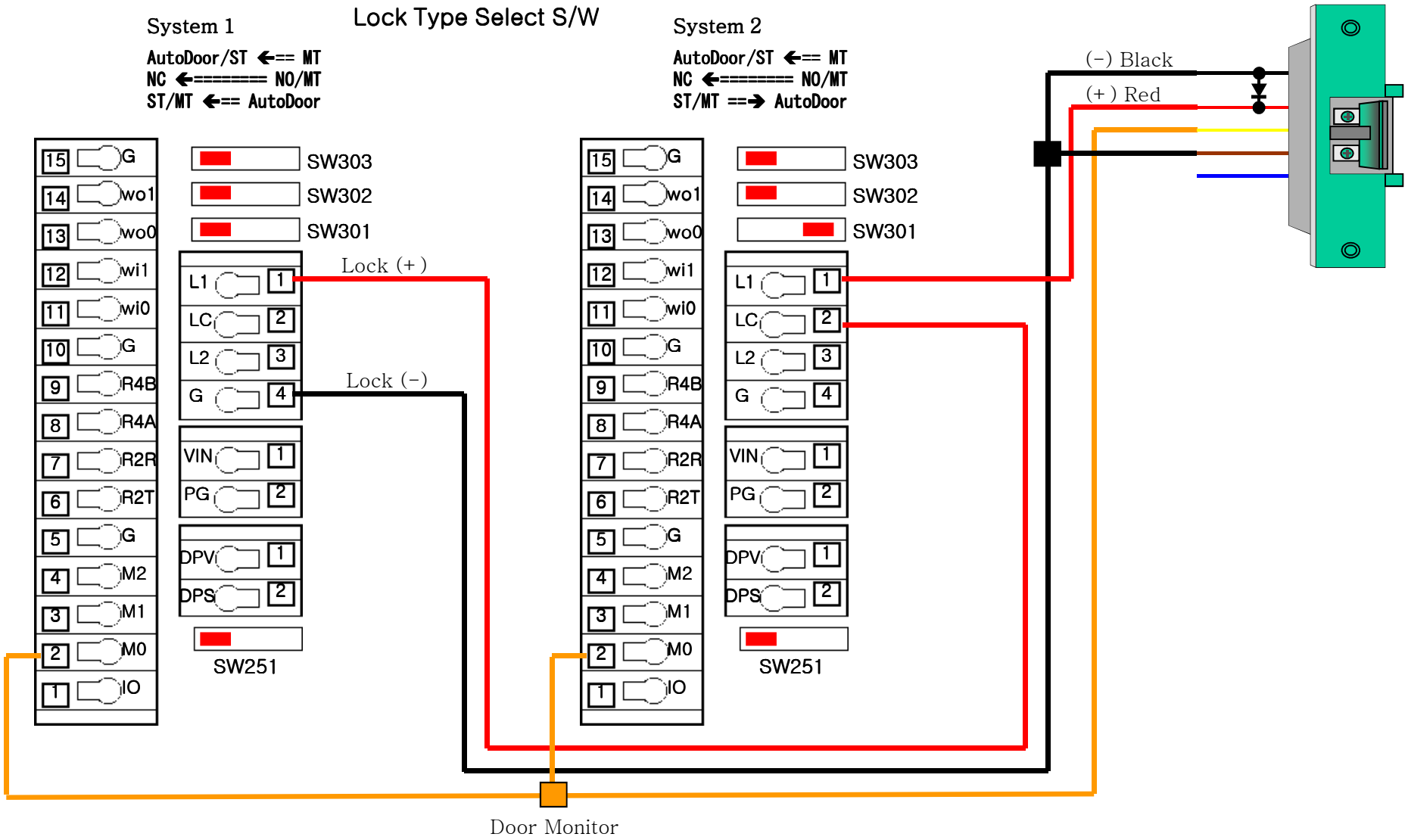

10. Connecting Strike Type Door Lock (Fail Secure)

10.1. Connect with One System/ One Lock

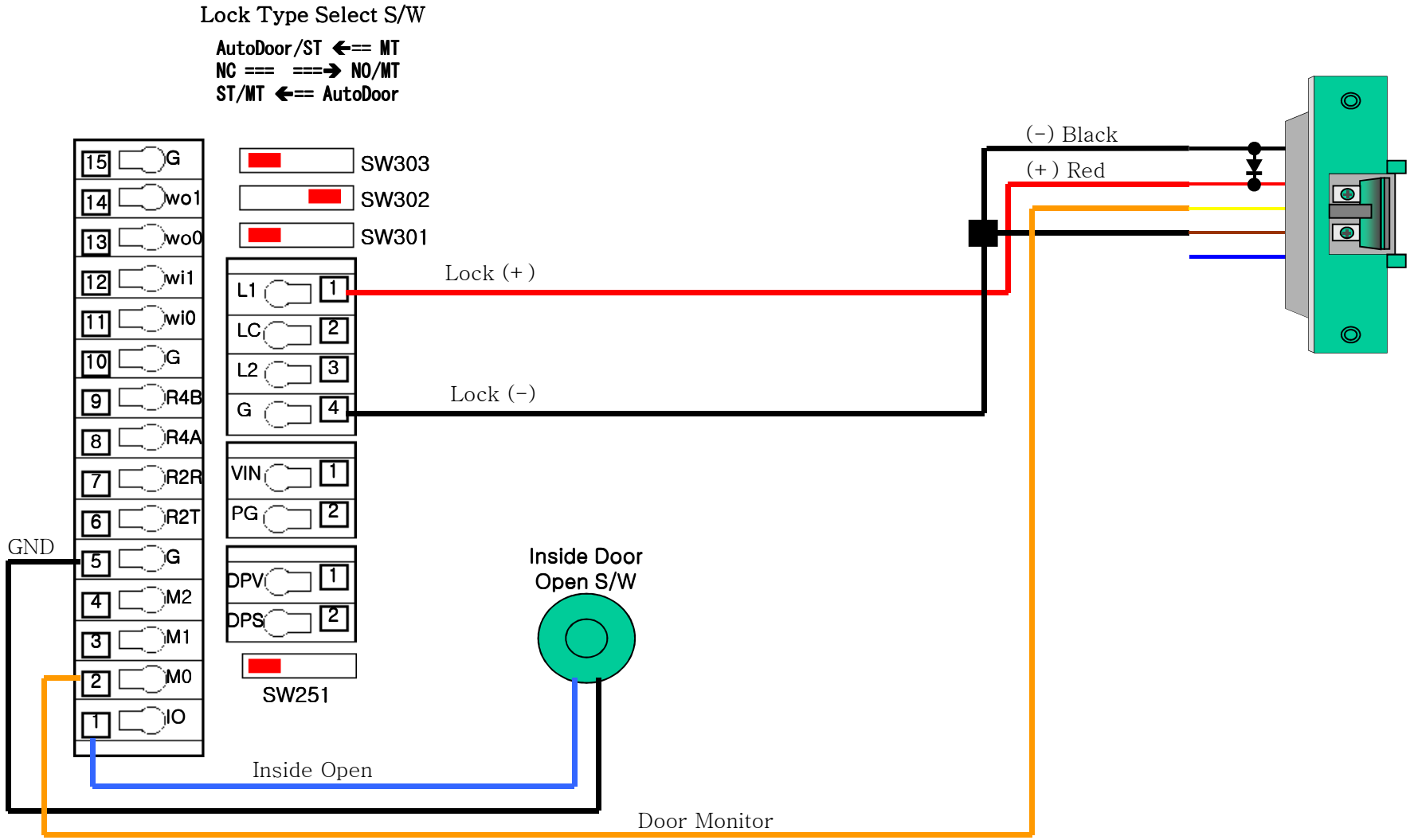

10. Connecting Strike Type Door Lock (Fail Secure)

10.2. Connect with Two Systems/ One Lock

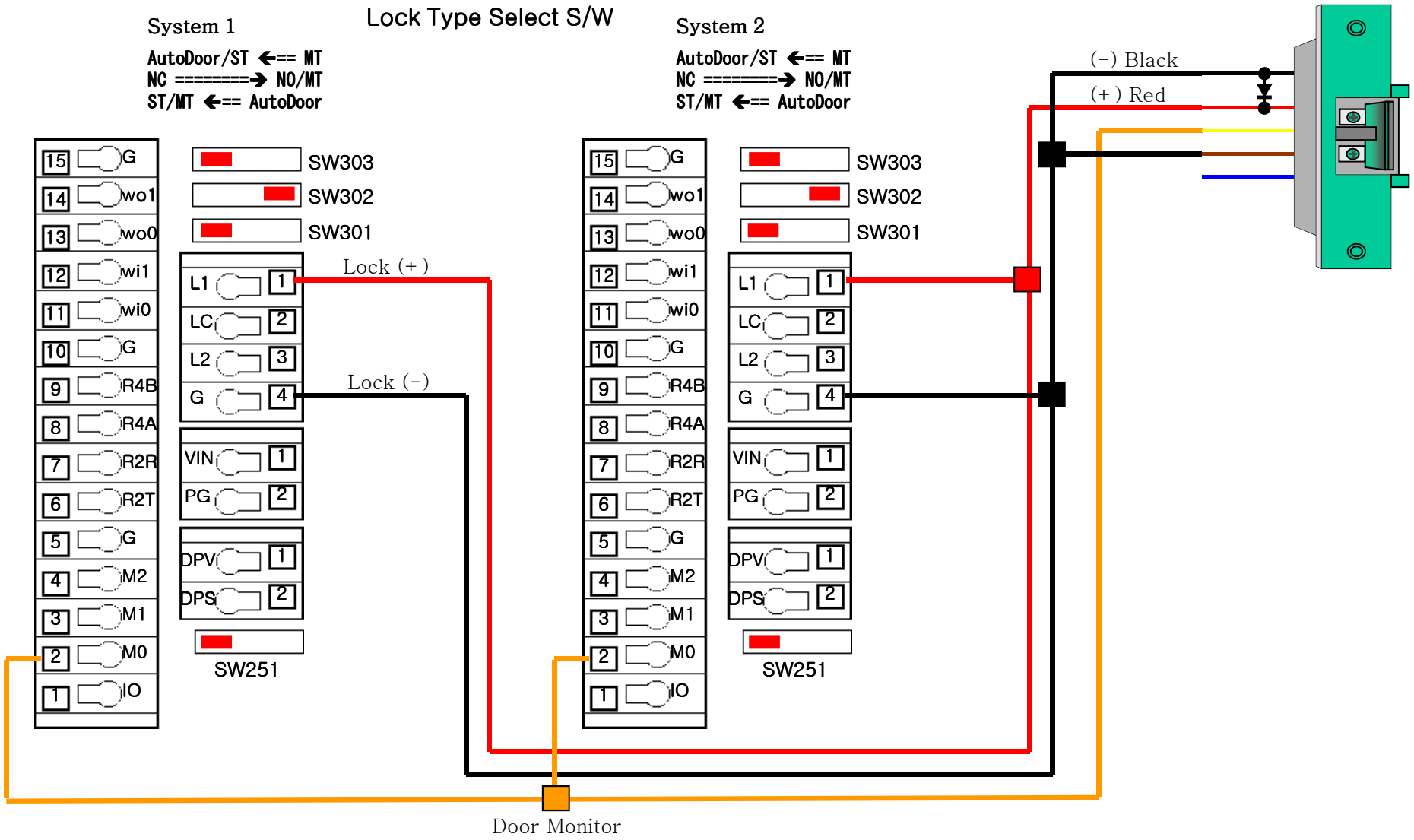

11. Connecting EM Type Door Lock (Fail Safe)

11.1. Connect with One System/ One Lock

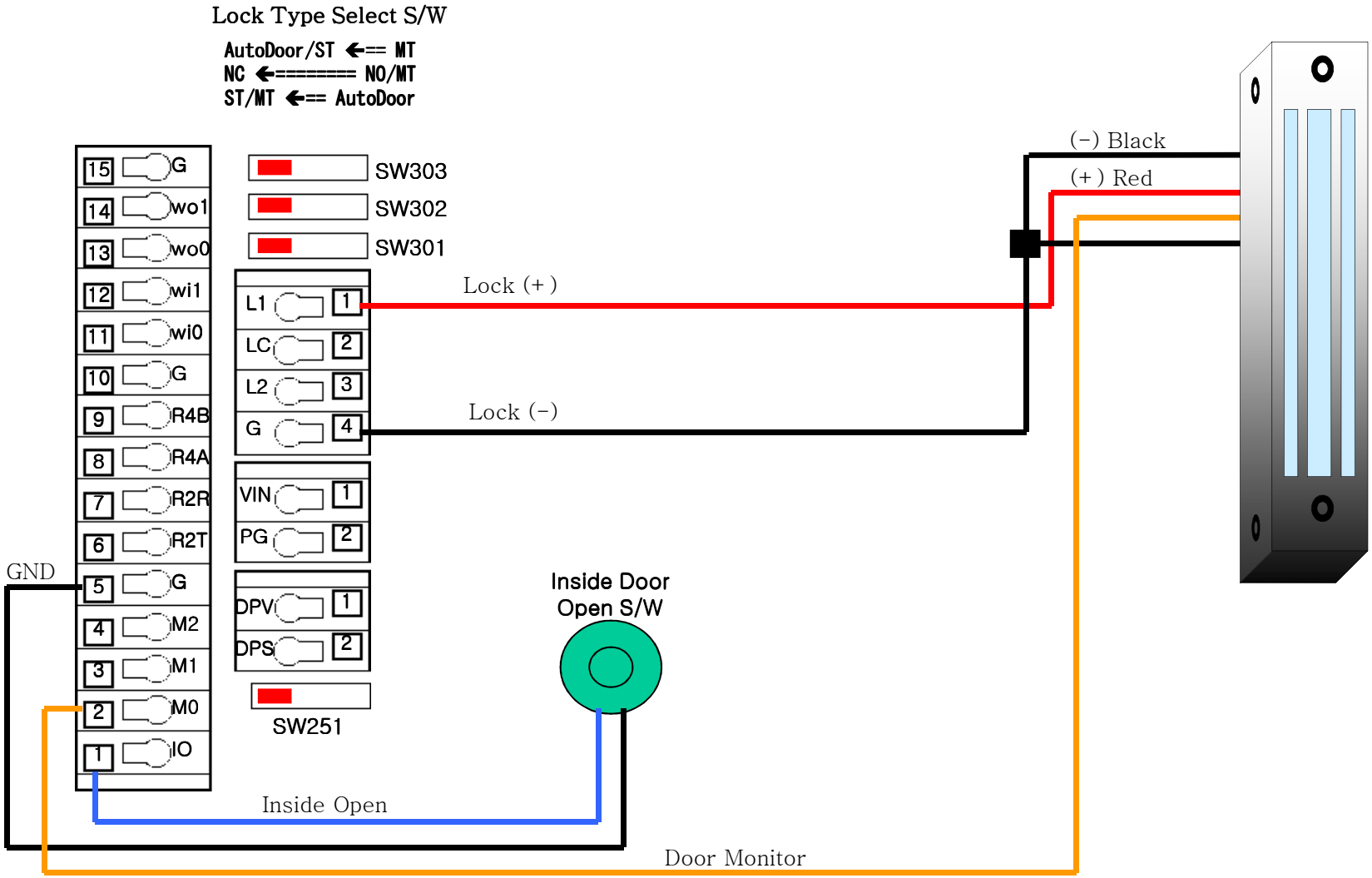

11. Connecting EM Type Door Lock (Fail Safe)

11.2. Connect with Two Systems/ One Lock

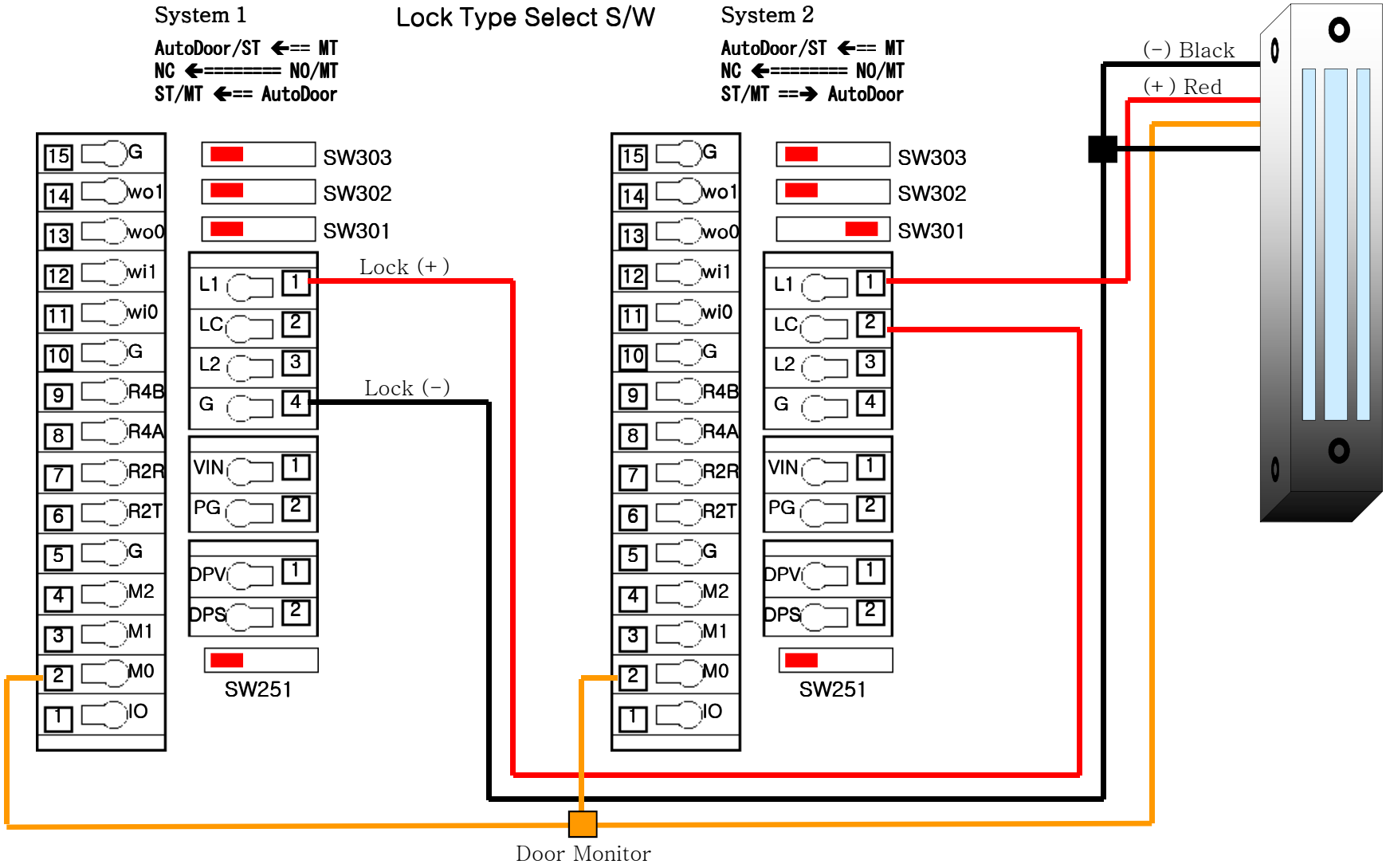

11. Connecting EM Type Door Lock (Fail Safe)

11.3. Connect with One System/ Two Locks ** Use external DC Power adapter”

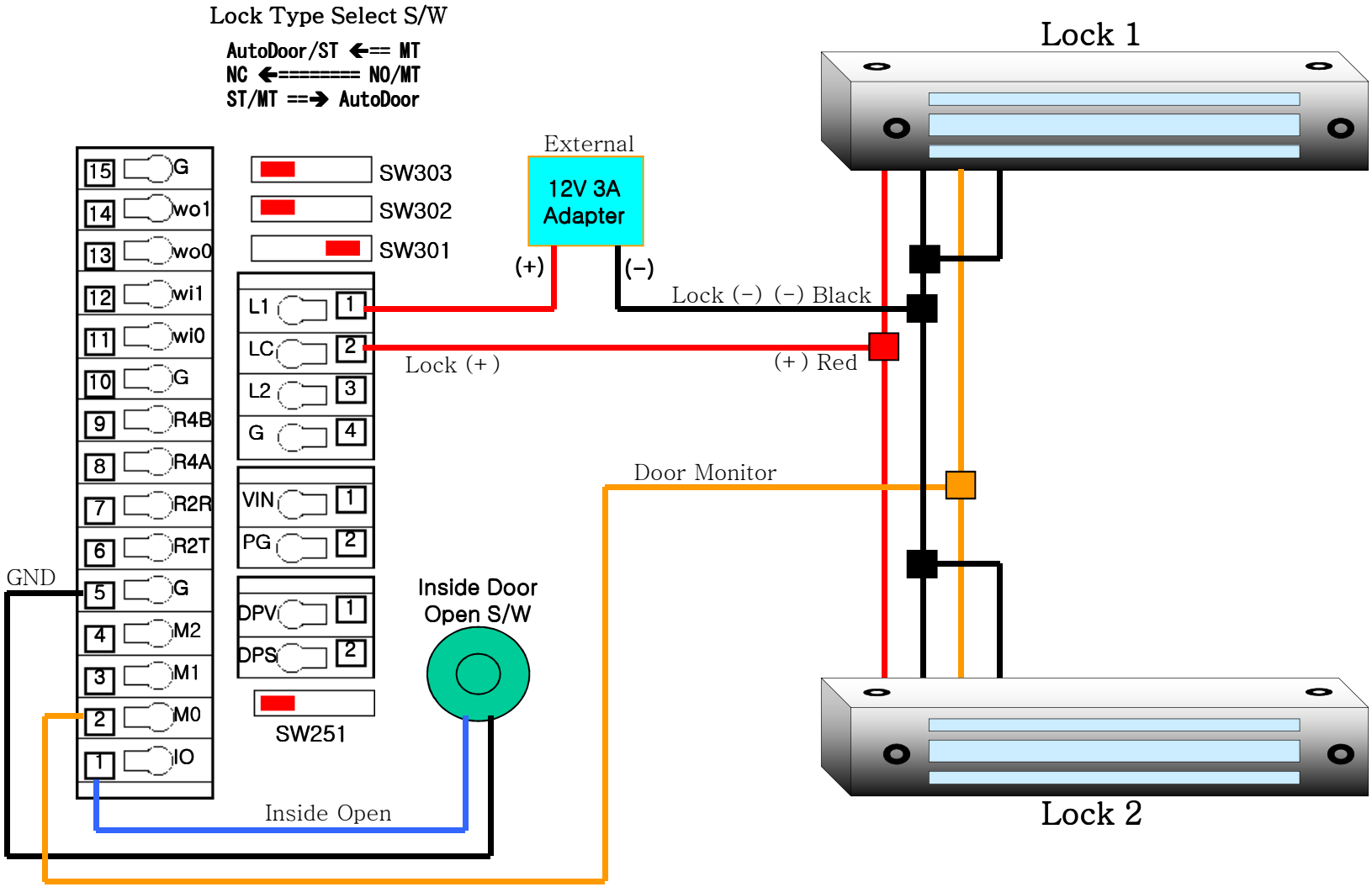

12. Connecting Auto-Door (Contact Control)

12.1. Connect with One System/ One Door

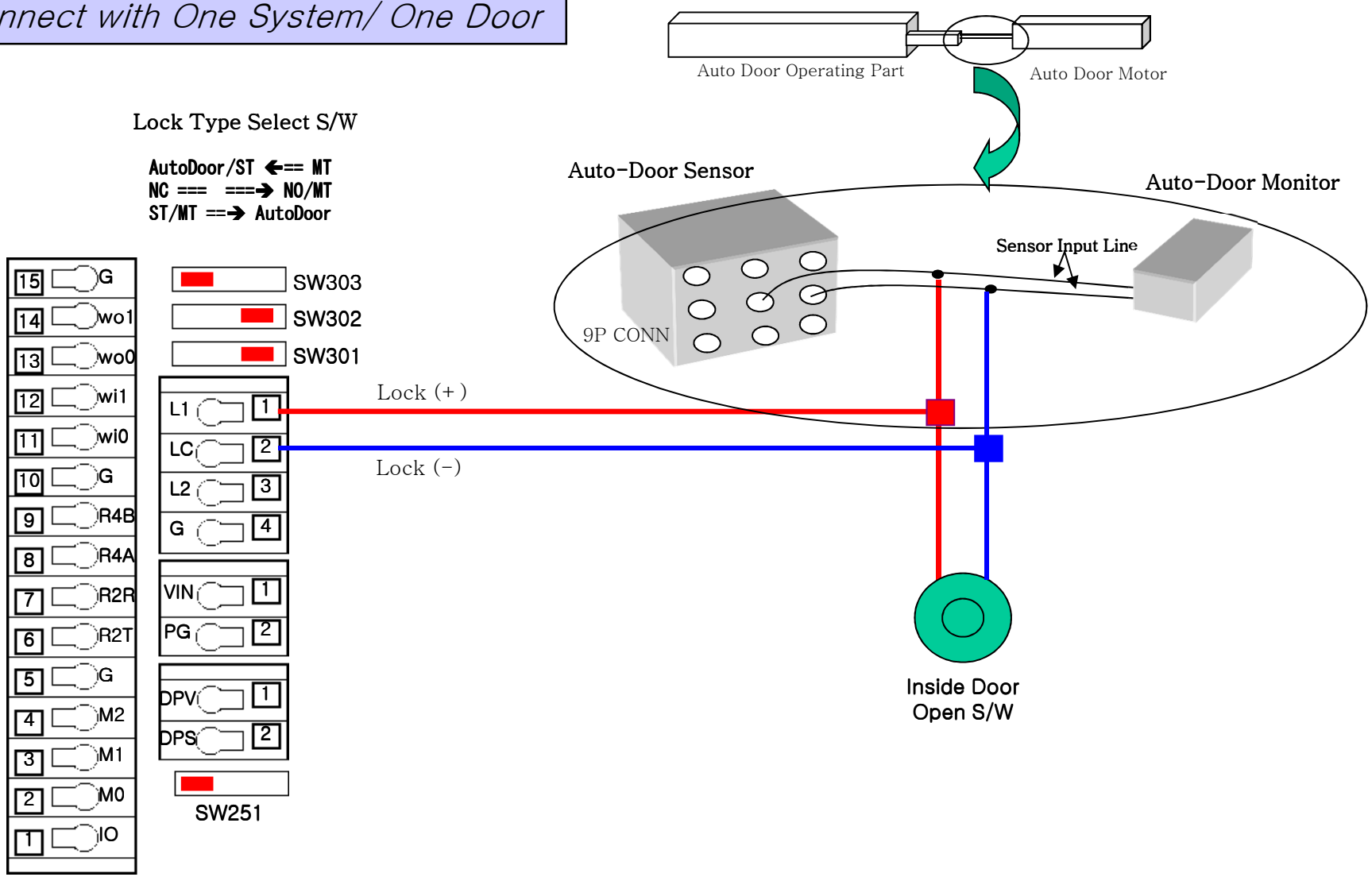

12. Connecting Auto-Door (Contact Control)

12.2. Connect with Two Systems/ One Door

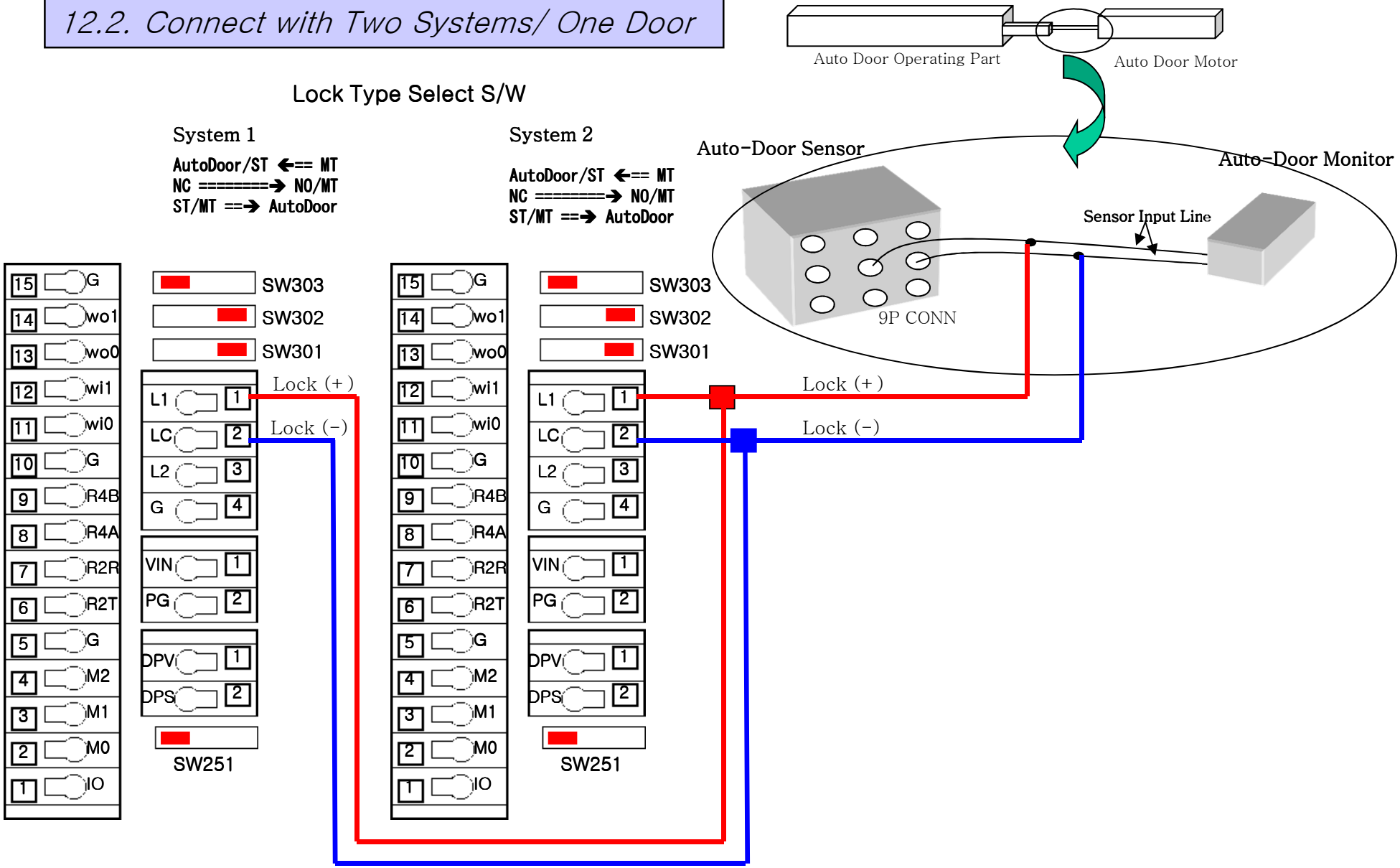

13. Connecting Mortise Lock

13.1. Connect with Motor Lock

Lock Type Select S/W

AutoDoor/ST ==➔ MT
NC ========➔ NO/MT
ST/MT ⬅== AutoDoor

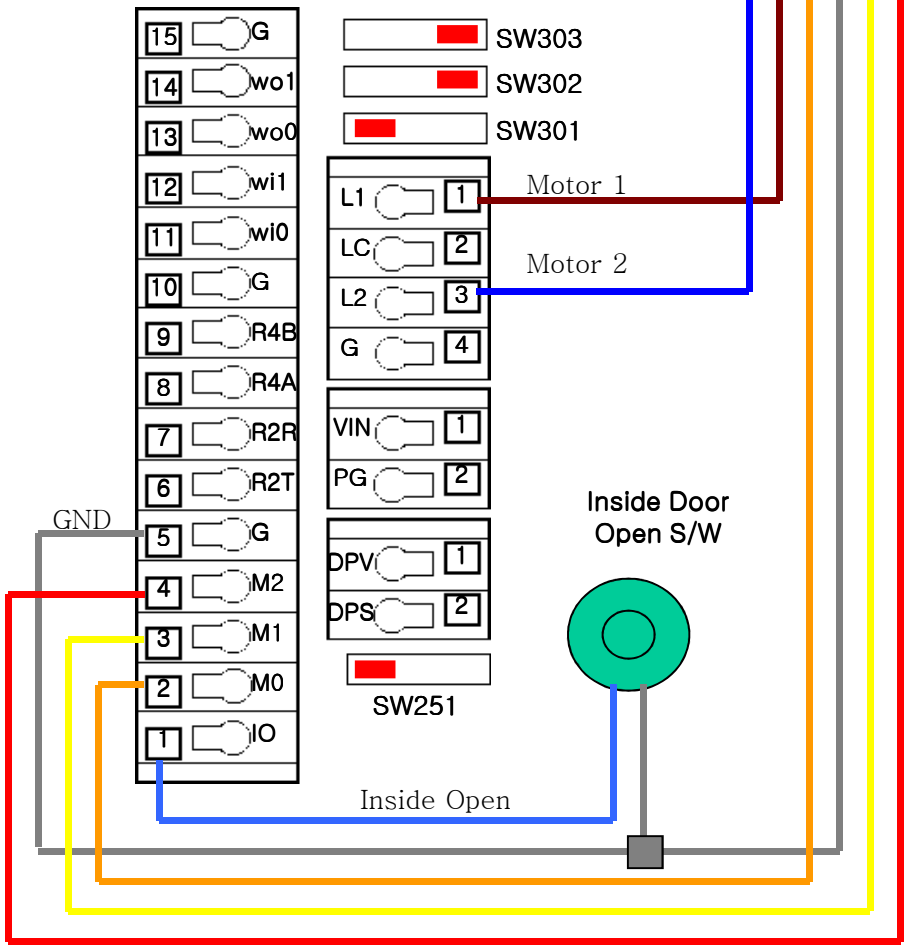

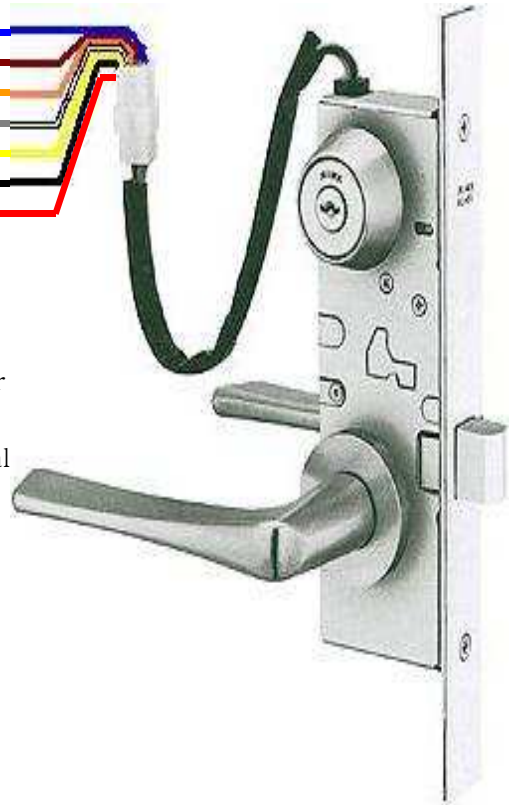

Blue : Motor 2
Brown : Motor 1
Orange: Door Monitor
White : Ground
Yellow : Unlock Signal
Black : Ground
Red : Lock Signal

** Example: AL3M Series.

** Select motor lock 1st in the Lock setting at the configuration menu.

13.2. Connect with Solenoid Lock

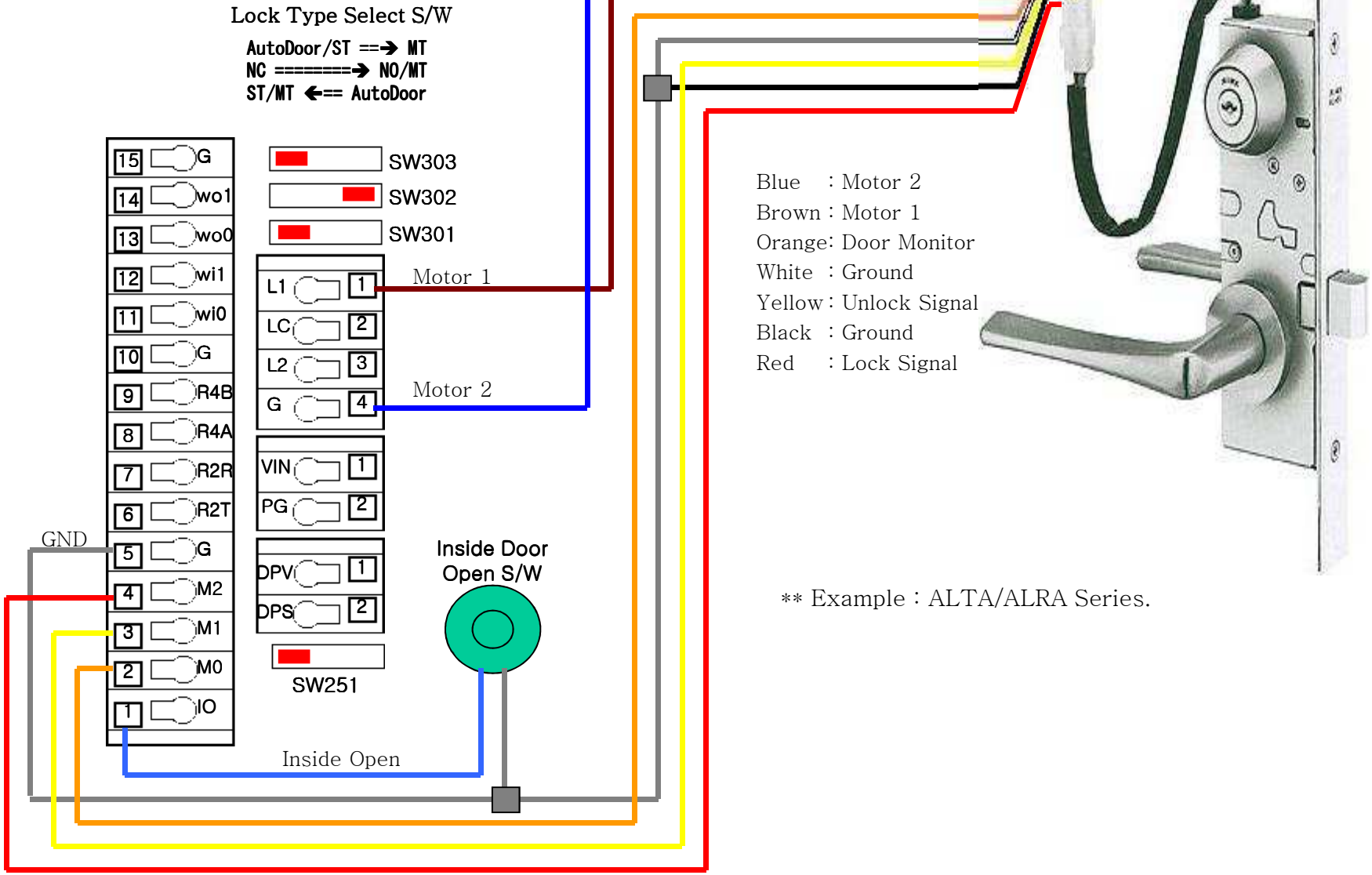

** Example : ALTA/ALRA Series.

14. Connecting 2 Emergency Lamps

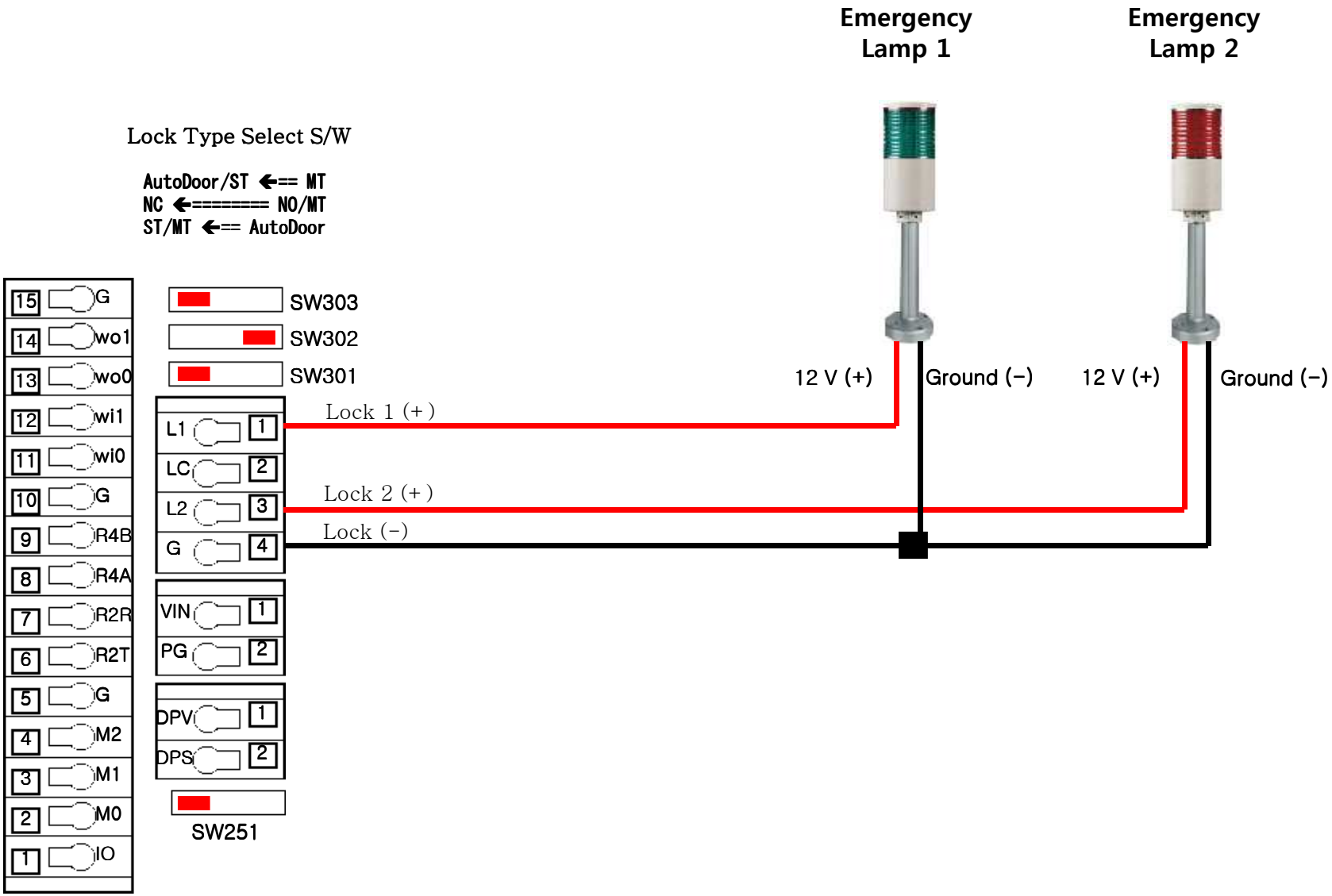

15. Connecting Wiegand Output to External Controller

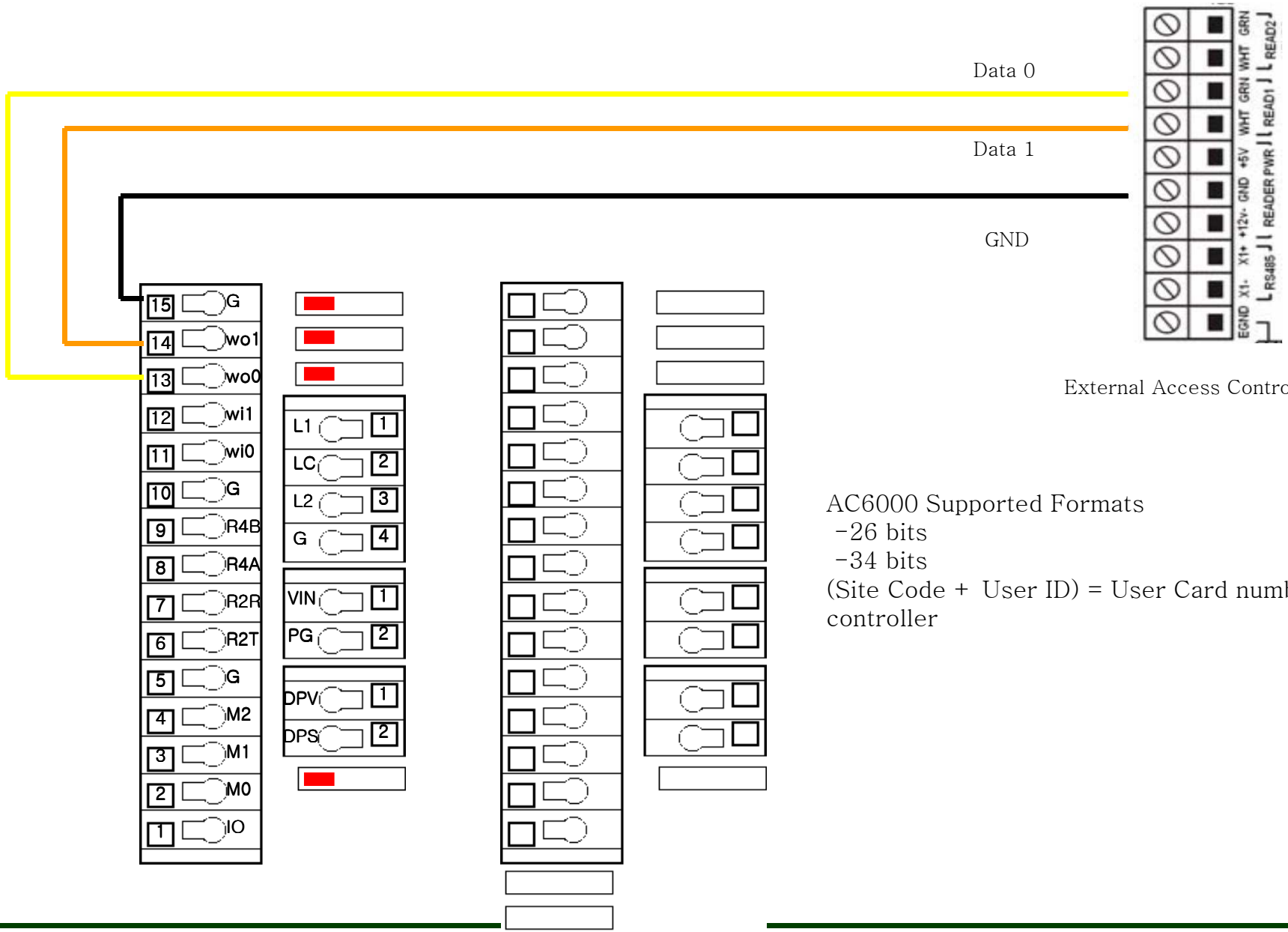

External Access Controller Input

AC6000 Supported Formats
-26 bits
-34 bits
(Site Code + User ID) = User Card number for controller

16.1 RS-232 Interface

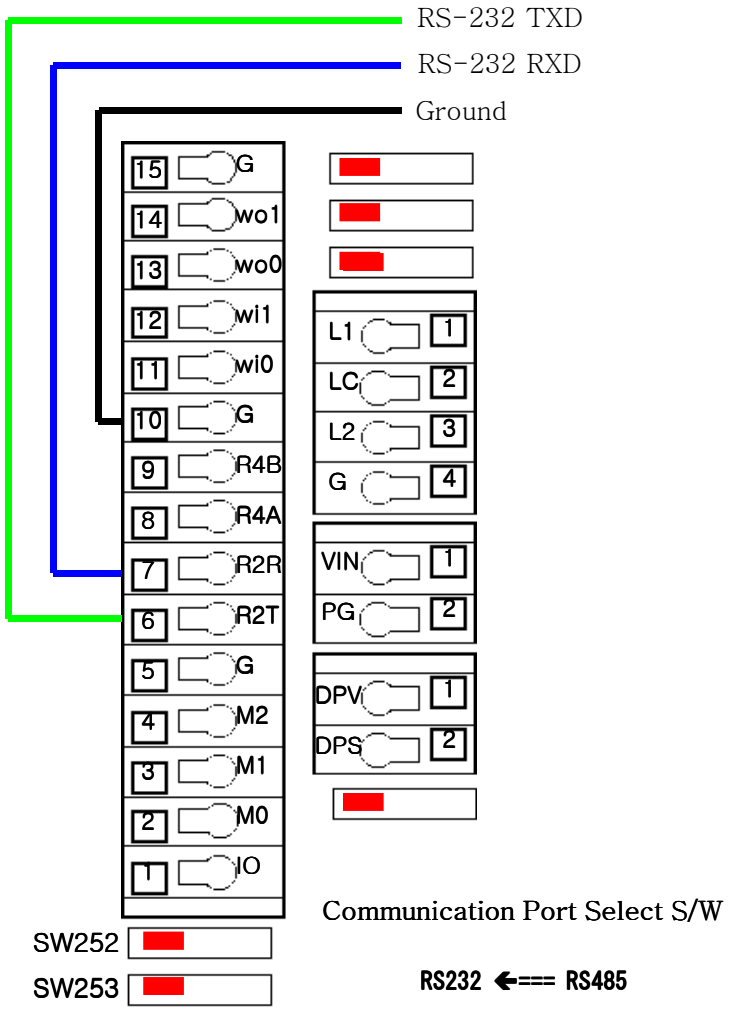

16.2 RS-485 Interface

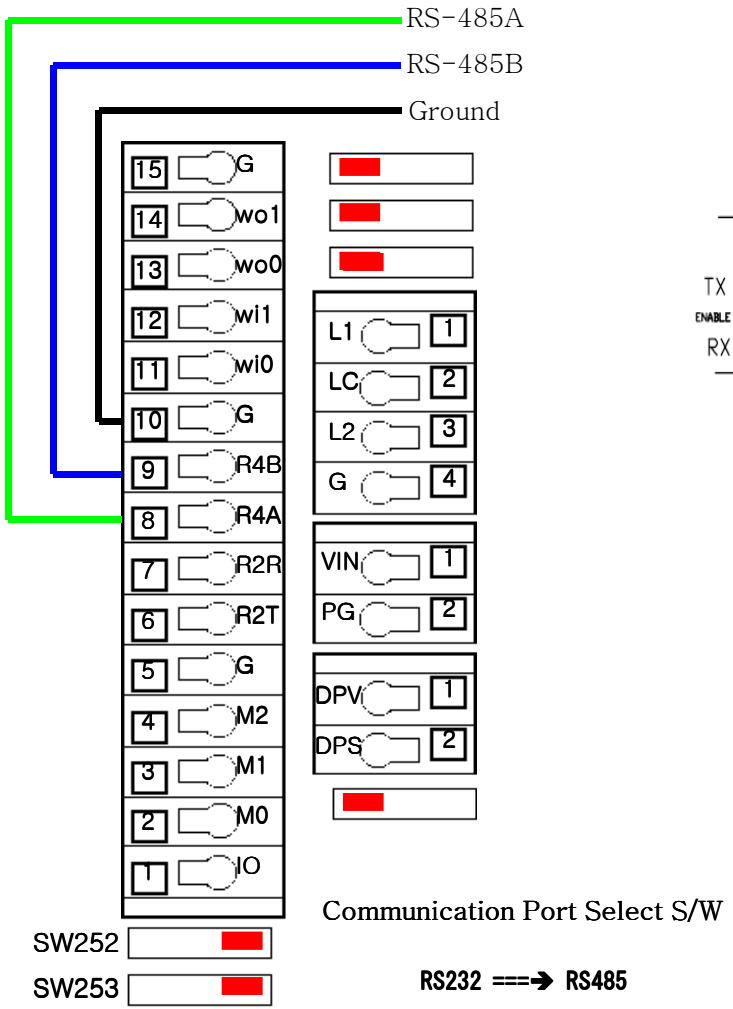

Communication Port Select S/W

RS232 ===➔ RS485

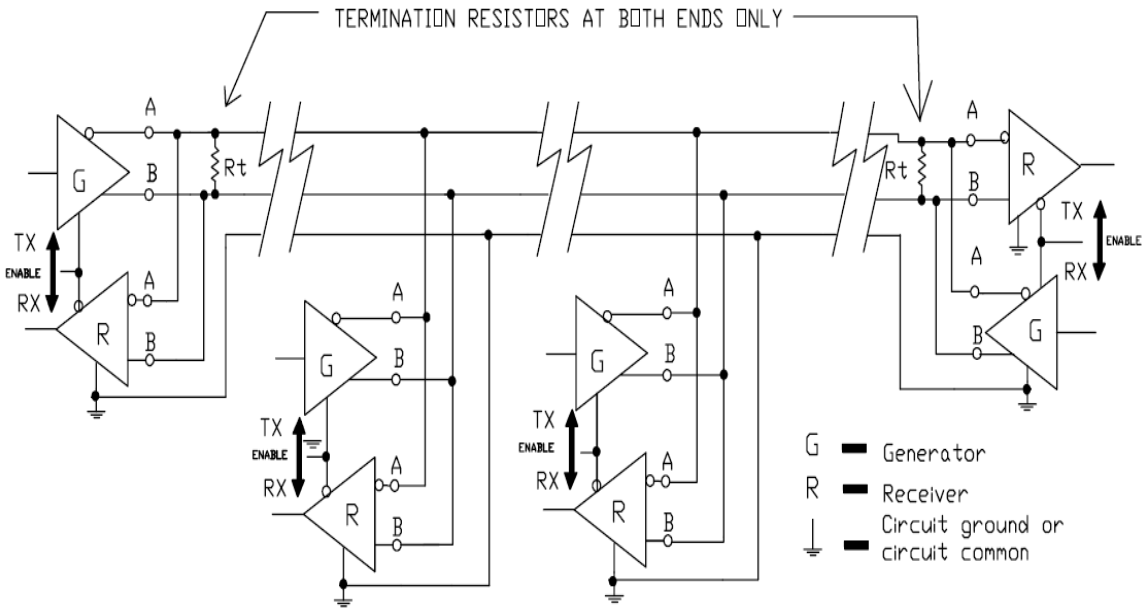

RS-485 TWO WIRE MULTIDROP NETWORK